Divide by 60 Counter

Part A

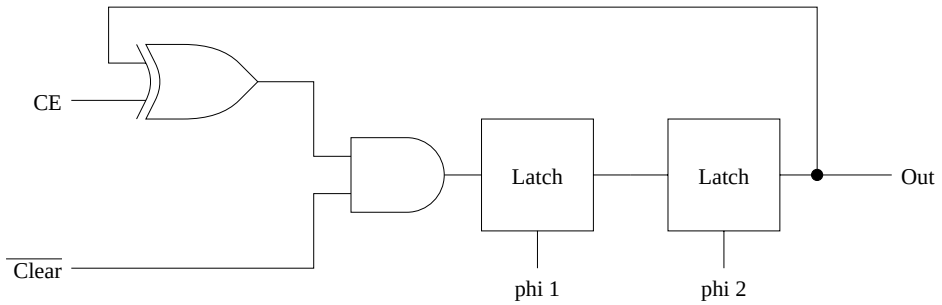
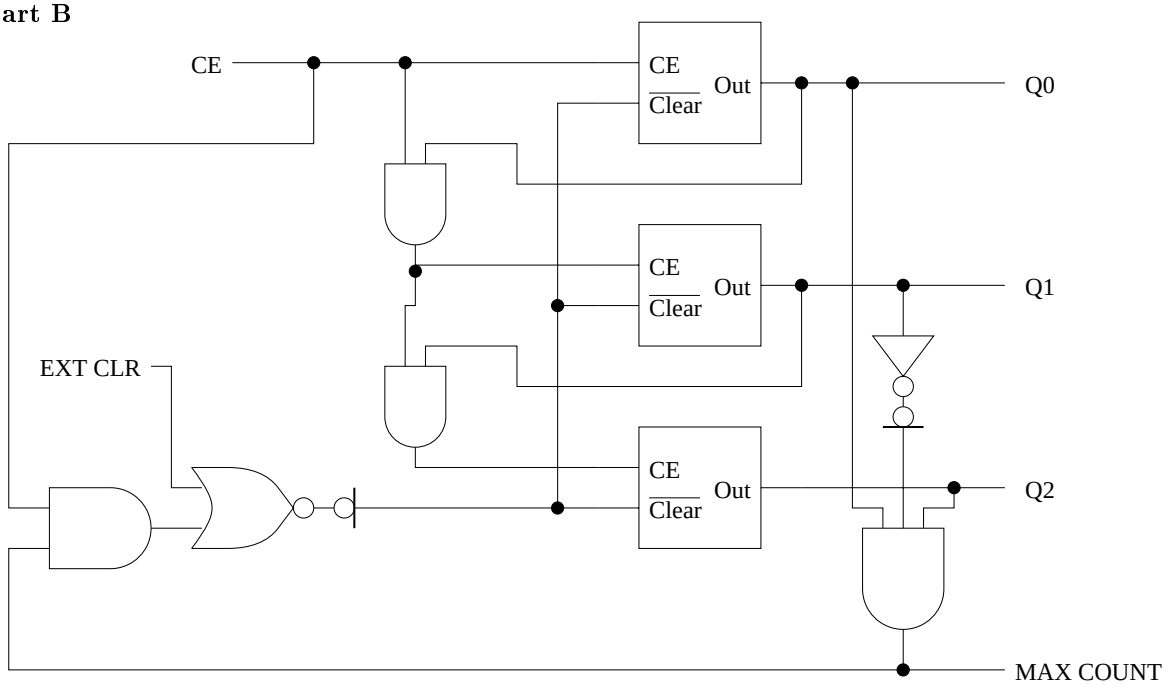
Part B